lafonte.eu

MIX 2.0 FILTRATION SYSTEMS

ADVANTAGES

- Ease of operation
- Long life
- Ability to Interchange with several different filtration systems in the same housing
- Ability to change between EVOLUTE magnetic drive and mechanical seal pump
- Three years warranty on filter housing

FEATURES

- Polypropylene machine solid monobloc filter housing
- Tilt lid with swing bolts closure system
- Magnetic drive or mechanical seal pump
- Solid Polypropylene base with discharge pipes and brackets on three side of the base
- Pre coat tank version
- Discs version, filter papers: D205/32 mm
- Filter housing improved distribution flow
- Tmax exercise 70°C with 3 Bar pressure

FILTRATION TYPE

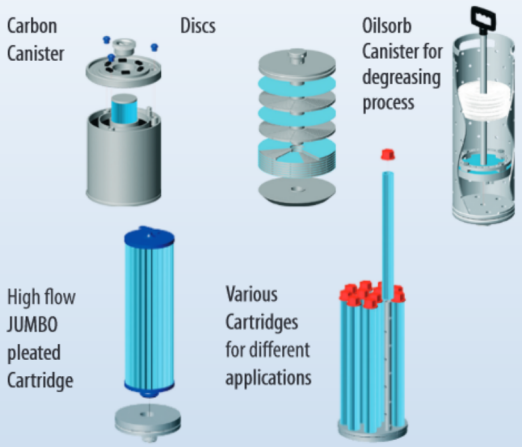

Series	Filter Chamber					Filter Element		Pump			OPTIONALS
	Discs Dxn° (m^2/l)*	Cartridges n° x l"	JUMBO DxH" (m^2)	Oilsorb (l)	Carbon (l)	Discs	Cartridges	Magnetic Drive	Mechanical Seal	Material	**A** = Suction Valve **M** = Discharge **B** = By pass pump/filter **C** = Carbon treatment valves group **G** = Pressure Guage **V** = Valve between pump and filter **T** = Prea coat tank **W** = Wheels **I** = Interlock sensor placed on splashproof lid ring
MIX	**7D1** 200x35 (1/4,3)	**7C1** 7x10	**7J1** 200x10 (2,5)			_ = carta **P**= Meraklon **T**= PTFE	_= DOE D63 **M**= DOE with spring closure system **P**=DOE D 70 **A**=SOE 222 **B**=SOE 226	**EVT7**	**EVM8**	_=PP **F**= PVDF	
	7D2 200x66 (2/8,6)	**7C2** 7x20	**7J2** 200x20 (5)	**7O2** (15)	**7A2** (15)			**EVT7** **EVT12** **EVT15**	**EVM8** **EVM12** **EVM15**		
		7C3 7x30						**EVT 12** **EVT 15** **EVT20**	**EVM12** **EVM15** **EVM20**		
MIX	**7D1**					**P**		**EVT7**			**GTR**

* m^2 = Surface area / l = Sediment Volume

STANDARD VERSION

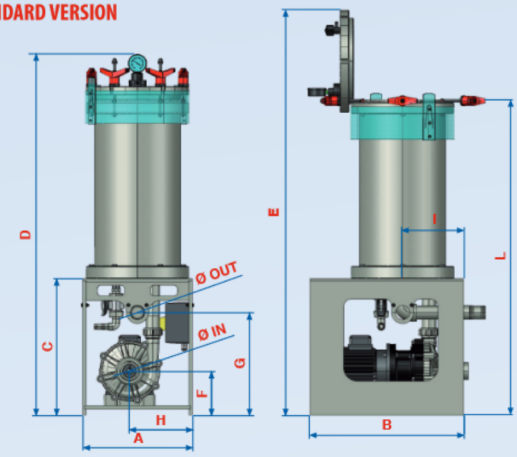

PRECOAT TANK VERSION

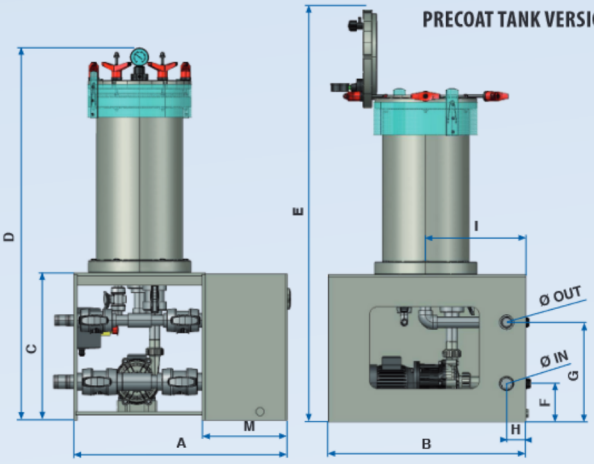

SERIES	HOUSING	PUMP	OVERALL DIMENSION												
			D in	D out	A	B	C	D	E	F	G	H	I	L	M
MIX	7D1 7C1 7J1	EVT7	32	32	340 650	440 500	350 420	920 990	1020 1090	117	245 300	134 65	170 240	750 840	250
		EVM8	40 50	40	395 720	560 600	420	990	1090	145	295	198 90	192 290	840	
	7D2 7C2 7J2 7O2 7A2	EVT7	32	32	340 650	440 500	350 420	1175 1245	1275 1345	117	245 300	134 65	170 301	1005 1095	250
		EVM8	40 50	40 40	395 720	560 600	420 500	1245 1325	1345 1425	145	295 355	179 90	192 290	1095 1175	
		EVT12 EVM12 EVT15 EVM15	50	40											
	7C3	EVT12 EVM12 EVT15 EVM15	50	40	395 720	560 600	420 500	1505 1585	1605 1685	145	295 355	179 90	192 290	1355 1435	250
		EVT20 EVM20	50	50											
		EVT25 EVT30	63	63	395	560	460	1545	1645	162	335	198		1395	

50 Hz

Rpm 2800	EVT7	EVM8	EVT12 EVM12	EVT15 EVM15	EVT20 EVM20	EVT25 EVM25	EVT30 EVM 30
KW	0,25	0,37	0,55	0,7	1,1	1,5	2,2
A* 230/400V	1,2/0,7	1,8/1,0	2,3/1,25	3,13/1,7	4,9/2,5	6,5/3,8	8,7/5,0

* Values could change according with type of used motor

60 Hz

Rpm 3450	EVT7 EVM8	EVT12 EVM12	EVT15 EVM15	EVT20 EVM20	EVT25 EVM25	EVT30 EVM 30
KW	0,37	0,55	0,7	1,1	1,5	2,2
A* 220/380V	2,6/1,5	2,9/1,7	3,9/2,2	6,0/3,5	8,0/4,6	10,2/6,0

* Values could change according with type of used motor

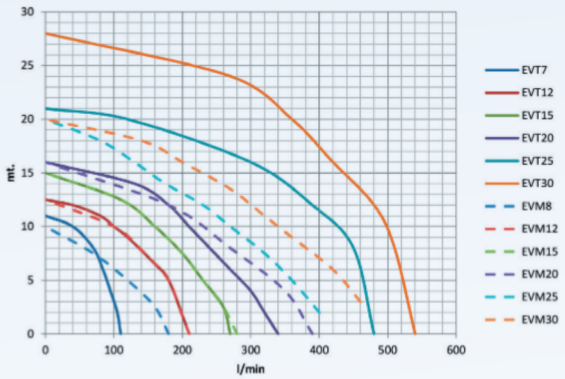

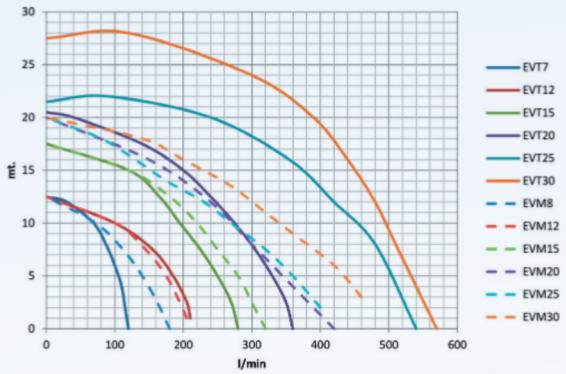

lafonte.eu P.le Cocchi, 2 - 21040 Vedano Olona (VA) Italy - Tel. +39 0332 402168 Fax +39 0332 402169 - info@lafonte.eu - www.lafonte.eu